Hwa Chong Institution
Project Work
Category 3 Project Report

Group 3-30: Suction Cup Holder

Done by Goh Yun Jie, He Zhixuan, Wu Chenao

Content Page:

1. Introduction

We are group 3-30, consisting of Goh Yun Jie (1i3), He Zhixuan (1i3), Wu Chenao (1A3)

We brainstormed different problems people faced and narrowed down to one problem to focus on. Afterwards, we thought of existing solutions and our own solutions to the problem. After much designing and sketching, we finally went on to make a working prototype.

2. Problem Finding

Below is our list of suggested problems:

1. Drinks spilling on desk or shirt

Every year, many people spill drinks that stain their shirts, and occasionally, cause property damage.existing solutions include not spilling the drink, or using addons like makesmatic bullet cup holder addon and mighty mug

2. Wiping down (some people do not do it)

In the current covid situation, wiping down is very important. However, not a lot of people actually do this, so inventions are essential to solve this problem. Since this problem is very recent, there are no existing solutions to this problem that have been invented yet.

3. Pest control (mosquitoes, pigeons, rats etc.)

This problem is on how to repel pests. Existing solutions include mosquito repellents, using yellow LED lights, and mosquito zappers. We could also use essential oils, strong winds or garlic (some traditional methods).

4. Rain

This problem is about how umbrellas are too small to shield us from the rain. Existing solutions: They all try to protect users from the rain, with one type of umbrella protecting one part and another protecting another part, but the one that covers all of them is a little too big and bulky. ***Maybe we could make one umbrella that is not bulky but still can cover ourselves totally from the rain.*** (fyi we changed this to shoes getting wet after thinking about it)

5. Climate change/environment in general

As most of us know by now, climate change is a major problem in society. Existing solutions include: Pumps to cool down coral reefs, plastic eating enzymes, non polluting homes, a bin that collects garbage from the ocean, glass and beer bottle crusher kiosks(the crushed bits turn into sand and are put back on the beach). More solutions: Edible plastic products (will not kill wildlife), something that collects carbon soot from exhaust and turns it into ink, a machine that turns food waste into gas for cooking use, a sieve that makes ocean water drinkable and a plane that only emits water vapor. There are many solutions here as this is a major issue in the world.

6. Elderly people's problems

These inventions help tackle problems faced by elderly people. Existing solutions include: Umbrella that doubles as a torch and walking stick for the elderly and a lamp that senses elderly falling on accident.

7. People with disabilities (to be specific, physical disabilities)

This is basically people with physical disabilities which means that they have limited mobility. Existing solutions of this problem include: cars for disabled people, mind controllable arm, a piano that plays by the user looking at keys and a wheelchair that allows users to stand up. These inventions give them more mobility.

After initial research of these problems we considered, we narrowed down to three problems.

Our 3 solutions that we narrowed down to and our suggested solutions to each of them:

1. Drinks spilling on desk or shirt
   A gyroscope cup holder (with roly-poly tech) or a suction cup holder that makes the cup in the cup holder more stable when put on surfaces.

2. Rain (how shoes get wet during rain)
   A covering that covers the shoes with a waterproof material to prevent shoes from getting wet or a water “sucker” inside the shoes that would suck the water inside away.

3. People with physical disabilities
   Wheelchairs that are thin like bicycles to take up less space. Foldable wheelchairs (multipurpose) example: vertical, normal, toilet, stair climbing mode. Portable ramps (foldable) for easy access over ramps.

3. Evaluation Grid

Using a criteria matrix, we made several considerations for selection.
We chose relatable because we wanted to make sure that people would buy our product and could relate to the problem we wanted to solve, so there is a greater impact in the solution.
It is important to not overdesign so that the invention will not become too complicated and will be easier to construct a prototype. It is also better to concentrate on one part of the invention so as to make it as good as possible.

Considerations for Selection	Problems		
	Shoes getting wet during rain	People with physical disadvantages	Drinks spilling
Relatable (1)	3	1	2
Conveniences lives of people (2)	1	3	3
Solution not technologically advanced (3)	3	1	1

Solution not Overdesigned (4)	1	1	2
Total Score	8	6	8

Tiebreaker:

There was a tie between shoes getting wet from rain and drinks spilling. In the end, we chose to solve the problem of drinks spilling because the solution would probably be less technologically advanced and easier to make a prototype.

4. Our Problem Definition

When we are doing work on a table, we would sometimes have a drink next to us to quench our thirst. However, if we are not careful, they can easily be toppled over and spilled onto our computers or papers. This can make a mess and can be hard to clean up. We have to avoid this completely. So, we decided to think of a solution.

4A. Existing solutions:

4A)i). Self stabilising tray cup holder (implemented in couch console) -- gyroscope technology (works on the hand)

4A)ii). Mighty mug - uses the concept of suction to balance itself so it does not tip over (works on a flat surface)

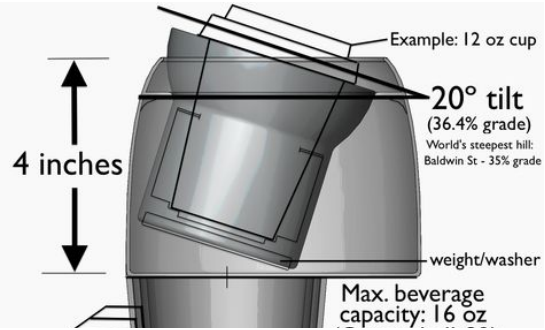

4A)iii) Maksimatic Bullet car cup holder -- gyroscope technology (works in cars)

5. Our Initial Solution:

After making a few possible solutions, such as:

Roly-Poly Cup:

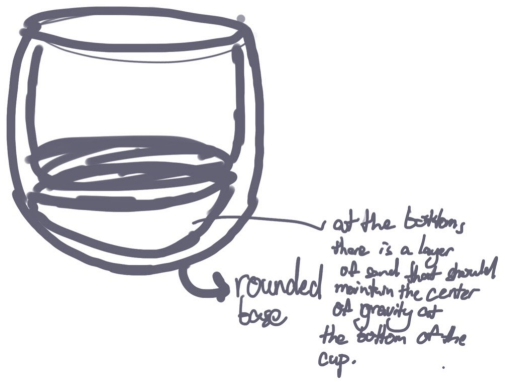

Gyroscope Cup holder:

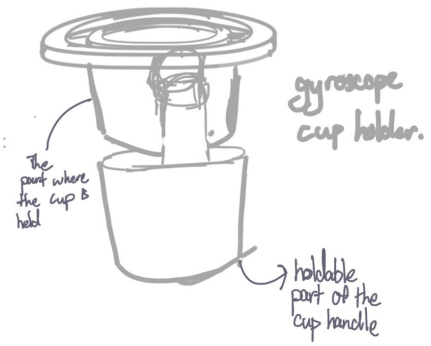

Gyroscope - Roly Poly Cup holder:

We wanted to make this invention as versatile as possible. It will not be toppled when on the table and also it will not topple when held on the hand. It uses roly-poly technology so it does not topple easily. The gyroscope works like the previous inventions. This is a combination to make the ultimate cup holder.

However, we thought about it and realised that roly poly technology will not be the most foolproof as the cup will still sway side to side, making it possible to spill. Although the cup does not topple over it will still shake a lot, causing it to still spill some of the drink. Also, the gyroscope technology will be hard to make in the prototype and also expensive. Hence, we opted for another form of self stabilising cup holder technology.

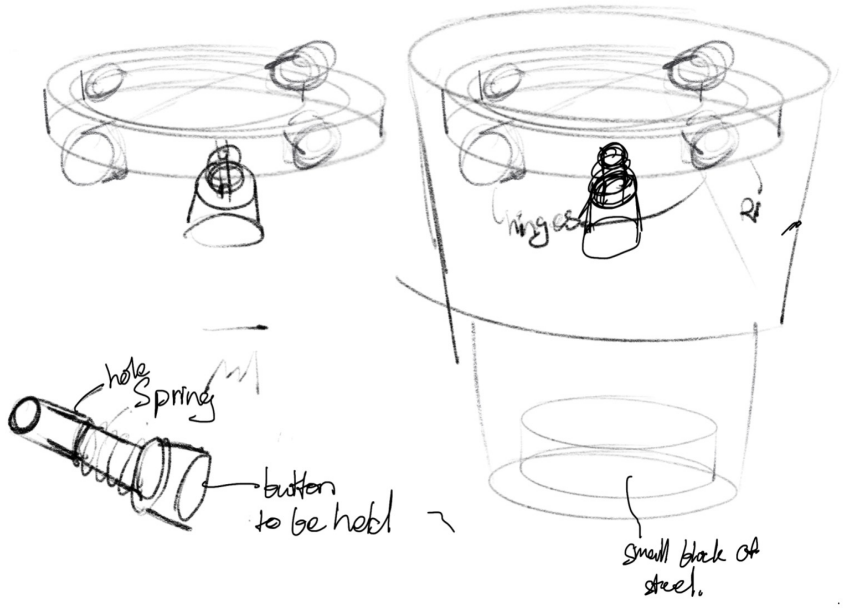

(sketch of prototype 1 idea)

6. Our Final Solution:

Suction Cup holder:

This is a cup holder which uses suction technology to prevent drinks from spilling and can be enabled and disabled. It is to prevent people from accidentally spilling drinks and causing a mess. Sometimes hot drinks can scald a person. This cup holder would thus allow people to drink beverages with less worries of it spilling.

How it works:

The suction acts as a “safety precaution” to make sure it does not spill. Since many people now work from home and might have a drink on their table, this prevents the drink from being accidentally toppled over, thus preventing property damage. It is different from the previous designs as it is a cup holder, allowing it to “transform” any cup into a self stabilising one. It is also a very simple design, giving freedom to any cup to become self stabilising. In the construction of the prototype, we can expect for the mechanism to not work and we may need to find solutions to them. It can be hard to find appropriate materials. We also might not have appropriate tools to build it. These were some expected challenges we met along the way of construction of the prototype.

How the suction works:

After research, we found out a way to easily enable and disable suction. If the middle of

a suction cup is pulled upwards, the suction cup is enabled. If the middle of the suction cup is let back down, the suction cup will be disabled. This is how heavy duty suction cups increase their suction. Hence, we used this same concept in the development of our invention. We needed to make a mechanism that could be moved by the user to pull and push down the middle of the suction cup.

Below is the 3D model and sketch of our initial mechanism:

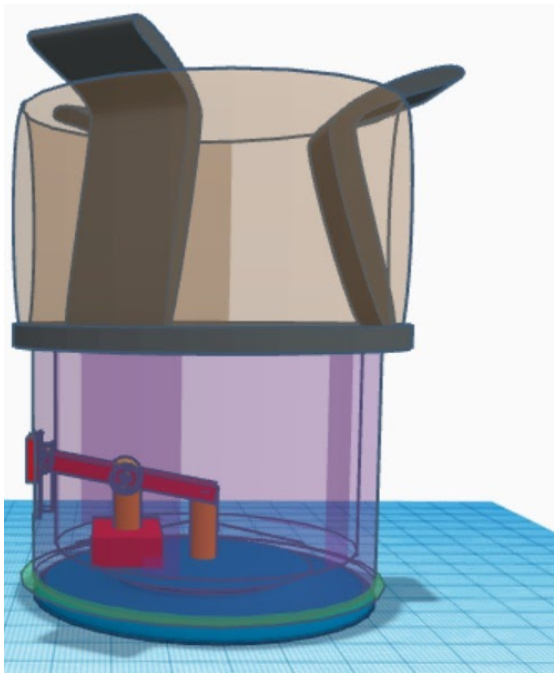

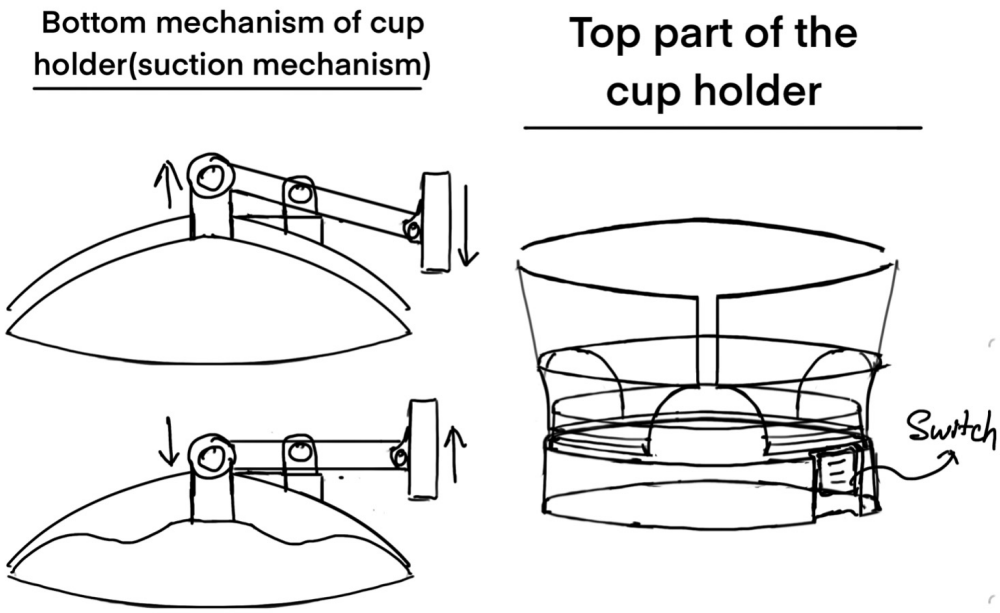

(This was our initial idea for the mechanism. However, we changed it)

We will elaborate more on this below:

7. Prototype Construction

Materials:

- Wood
- Thick pipe
- Glue gun
- Saw

We chose wood as our main material as it is strong yet easy to craft with. We also needed a skeleton for our prototype. We chose to find a thick plastic pipe. Tools include a glue gun to stick the parts together and the saw to cut parts of wood and the pipe out. We thought that if we were to actually make this invention in real life, we would use plastic instead of wood as plastic is more waterproof compared to wood and is more durable. For the suction cup, we bought one online and modified it as we could not make a suction cup ourselves. We were also considering making a cover to the cup holder. However, it was not possible as some cups could be taller in size, hence jutting out of the cup holder. Hence, a cover is not possible as there might be a gap between the cup and the cup holder.

Also, for the mechanism of enabling and disabling the suction cup, we decided to change it up as the previous mechanism we thought of did not work well. So, we made a new one.

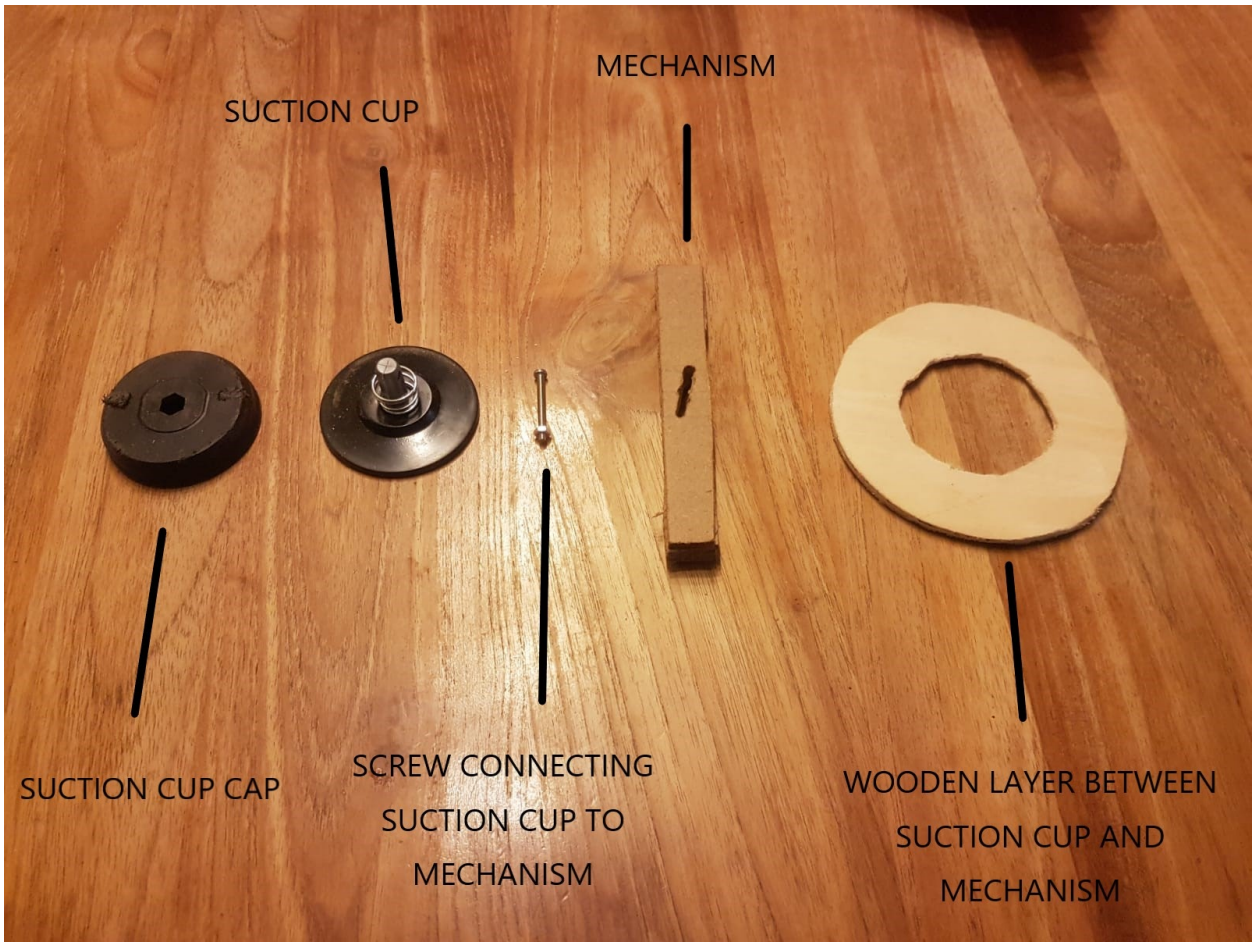

(components of the prototype excluding the tube)

The order of the materials inside the tube:
Green: Mechanism
Black: Suction cup
Blue: Wooden layer between suction cup and mechanism.
Grey: Screw connecting suction cup to mechanism.

TOP

Mechanism

Screw connecting suction cup to mechanism

Suction Cup with the wooden layer around it

BOTTOM

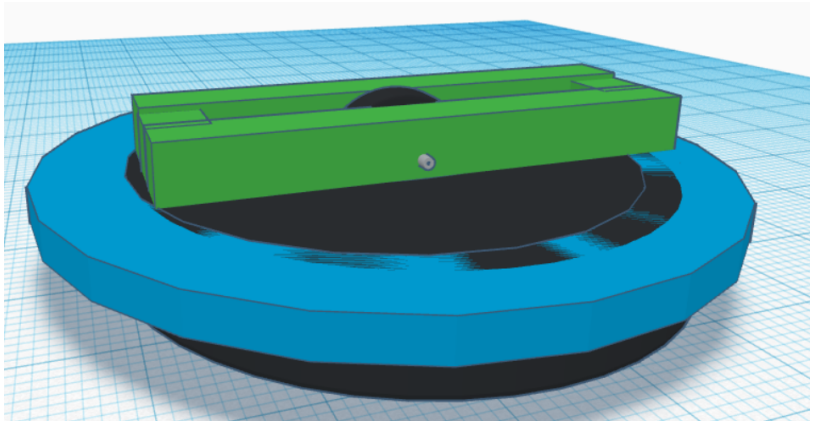

It looked like this from the top before placing down the circular wooden platform:

(Top view of the mechanism and suction cup before the second layer of wood was put on to separate the mechanism and the area where the actual cup is placed)

This is our prototype:

As you see, there is a switch that can be pushed and pulled to activate and deactivate the suction cup.

Then, we did tests to see if we can make more modifications to it.

Test Iteration:	Tick			Remarks (suggest possible modification(s) for improvement)
Test:	Pass	Fail	50/50	
Can it be toppled easily?	Tick			Nil
Can all cups fit in it?		Tick		Cut out holes for mugs to be put in as well. There needs to be space for the handle of mugs.
Is it easily removable?			Tick	We think that the suction may be a bit too strong. However, the mechanism we made could slightly weaken the suction. It works sometimes, but sometimes it does not.

After cutting a hole for mug handles to be slotted into, here is our final product.
Our final prototype:

8. Method of Operation

This is how our invention works:
Step 1: Place a cup in the cup holder.
Step 2: Place the cup holder on a flat surface.
Step 3: Push the mechanism such that the suction is enabled.
Step 4: To disabled suction, pull the mechanism back. Lift the cup holder off the table. If it does not work, shift the cup holder to the edge of the table.

9. Reflection

Group Reflection:
This Project Work journey has been filled with challenges, and is not that smooth-sailing. We learnt to work as a team and finish work efficiently as a group by exercising teamwork. When faced challenges like the construction of the prototype etc, we did not give up and found a solution quickly. We learnt new skills in the midst of this project work, such as how to research, brainstorm and construct.

Goh Yun Jie:

I think that we have worked well with each other as a team. We managed to split the work among each other well and did not have any conflicts with each other. We accepted each others' ideas and gave good feedback to each other. I think that is how our project managed to run smoothly.

He Zhixuan:

This Project Work journey was a very new experience to me, and I am very satisfied and happy that we have successfully created a prototype and made the project run quite smoothly. Of course, there were ups and downs in this journey, but we persevered, thought out of the box, and worked effectively as a team to solve the problems successfully.

Wu Chenao:

This was a new experience for me, as it was the first year long project that ive ever participated in. We ideated about what we wanted to do, worked together to make the slides for the presentations and , 3d models and more, before finally, here, with out own prototype. Of course,we also had our ups and down, faced challenges, but we learnt to cooperate , and overcame them, one by one.

10. References/Bibliography

Page 1[Image 1A]
https://www.fontanamazda.com/blog/how-to-safely-clean-and-disinfect-the-interior-of-your-mazda/
[Image 1B]
https://www.shutterstock.com/search/spilled+drink
Page 2 [Image 2A]
https://parenting.firstcry.com/articles/pest-control-with-a-baby-around-how-to-go-for-it/
[Image 2B]
https://www.eaglecreek.com/blog/travel-rain-day-how-real-travelers-beat-bad-weather.html
[Image 2C]
https://climate.nasa.gov/solutions/adaptation-mitigation/
Page 3 [Image 3A]
https://seniorslifestylemag.com/lifestyle/hobbies-interests-for-the-elderly/
[Image 3B]
https://www.psychologytoday.com/sg/blog/disability-in-motion/201812/how-help-people-disabilities-feel-welcome
Page 5 [Image 4A]
https://www.indiegogo.com/projects/the-couch-console
[Image 4B]

https://themightymug.com/pages/about-us
Page 6 [Image 5B]
https://gizmodo.com/that-magical-spill-proof-cup-holder-now-works-in-any-ve-1689637147

Articles:

https://www.youtube.com/watch?v=142RyKTnv1I Retrieved Feb 25

https://www.kickstarter.com/projects/thecc/the-couch-console Retrieved Feb 25

vulcanpost.com/102481/innovative-umbrellas-monsoon-rain/ Retrieved March 3

https://scootaround.com/en/the-best-narrow-wheelchairs-for-tight-spaces-and-doorways Retrieved March 4

https://www.insider.com/tested-spillnot-claims-drinks-unspillable-review-2019-5 Retrieved March 4

https://themightymug.com/pages/about-us Retrieved 5 March

https://www.channelnewsasia.com/news/cnainsider/designer-folks-kevin-chiam-invents-kitchen-products-blind-10762318 Retrieved 12 March

https://medium.com/swlh/why-has-no-one-successfully-reinvented-the-umbrella-155d21f77ab Retrieved 12 March

https://www.ba-bamail.com/content.aspx?emailid=4692 Retrieved 25 March

https://www.trendhunter.com/slideshow/spillproof Retrieved April 1