Group 11-06:
Development of a Science Exhibit

Ling Jun Quan(2O320), Du Mingkai(2O306),
Jason Lai(2O315), Wang Zichang(2O329)

Abstract

Students in Singapore and around the world are not interested in everyday Science, and thus, they do not understand much Science in the world around them. This is mainly because Science is seen as difficult, and therefore, the learning of Science is seen as stressful. Even though Science brings about many benefits, such as helping humankind advance technologically and teaching essential life skills, students are just not able to seem to gain an interest in it. Our aim is to interest Primary 6 to Secondary 1 students through an interesting and engaging Science Exhibit. This will be done through the concept of fluorescence, which is the visible or invisible radiation produced from certain substances as a result of incident radiation of a shorter wavelength such as X-rays or ultraviolet light. The concept will be showcased through a pinball machine, which is able to showcase the concept yet be engaging. Although the concept seems hard, we hope that through the Science Exhibit, students will be able to understand that Science in general, is actually not that difficult. After several rounds of prototyping, the pinball machine was built. Several problems were discovered, such as the pinball plunger having too great a force. These problems will be amended and the Arduino, which coordinates the Light-Emitting Diodes so that they light up at precise timings, will be installed. We hope that students will have more interest in Science after playing with the pinball machine.

Section 1: Introduction

Many students do not have the curiosity for the world around them and lack knowledge in everyday Science. When Singaporeans were asked whether the Earth revolves around the sun in 1 day, 36.5% said that it was true (Ho *et al.* 2015). This is quite shocking because this was a very common Science fact, and yet many Singaporeans do not know about it. In a poll of 4000 children in the UK, only 47% of 9-year-olds enjoy Science, while this number drops to 38% among 12-year-olds (Porter & Parvin, 2008). In the same poll, it was found that only 6% of them rated Science as their favourite subject (Refer to Appendix Fig 1).

Students become disinterested in Science because Science is generally much harder as compared to other subjects. Using the A-levels as a gauge of the difficulty of a subject, Coe, Searle, Barmby and Jones (2008) concluded that "STEM subjects are not just more difficult on average than the non-Sciences, they are actually without exception among the hardest of all A-levels." Many adults also know that this is the case. In a nationwide survey done by the Pew Research Centre, 52% of U.S. adults felt that young people do not pursue a career in STEM subjects because the subjects were too hard (Kennedy, Hefferon & Funk, 2018). In an interview, a student expressed that Science was "Just pages and reams of notes. I'd got nothing to relate it to." (Porter & Parvin, 2008). The impression that Science is hard and boring is being believed by many students and parents; therefore students will feel disinterested in Science.

It is important to combat this problem because Science is a platform for skill-building and Science applies to everyday life. Scientific knowledge allows people to "develop new technologies, solve practical problems, and make informed decisions — both individually and collectively." (University of California Museum of Paleontology, n.d.) Should students not learn Science, humankind would not be able to advance technologically. More importantly, students will lose out on these life skills which are essential in their daily lives.

There are currently solutions to combat this problem. This includes textbooks that everyday students use. However, textbooks are boring and non interactive. This means that students will easily lose interest in it. Students will not be able to understand the concept very well because the actual concept is actually not happening in front of their own eyes; rather it is in the form of diagrams. All these reduce students' interest towards Science, and textbooks are therefore ineffective.

We aim to help combat this problem through a Science Exhibit. We hope that through this Science Exhibit, we will be able to present a Science concept that engages with the targeted audience (Primary 6-Secondary 1 students) and in the long run, spark students' interest in Science.

Section 2: Solution Design

Fluorescence, in short, is the emission of visible or invisible radiation produced from certain substances as a result of incident radiation of a shorter wavelength such as X-rays or ultraviolet light (UV light). This allows certain substances to "glow in the dark". Fluorescent materials absorb light in a certain spectrum and reflect other forms of light. The electrons of the fluorescing material get excited and climb up the energy level, ultimately falling back down and releasing the energy as heat or light energy. As the amount of light energy released is now lower than when it got absorbed, the light emitted may fall under another spectrum of light (Wikipedia contributors, 2020).

A blacklight is a type of lamp that emits primarily ultraviolet light and very little visible light. As ultraviolet rays have a shorter wavelength than visible light, it is mostly invisible to the human eye, so a room illuminated with a black light appears purplish (Helmenstine, 2019*)*. As for the fluorophore material, we will be using bleach. Bleach is mostly invisible under naked eye, especially when the surfaces are dried. As such, under normal sunlight, the bleach ink would not be visible but under a black light, the presumably invisible ink would shine. This is because bleach contains a substance that absorbs light from the ultraviolet spectrum and is released in the visible light spectrum. When a black light is shone onto bleach, the ultraviolet light from the blacklight is absorbed by it. The electrons of the ink then get excited and climb up an energy level. The electron will then ultimately return to its original position, releasing the remaining energy as light and thermal energy. As the light energy released is lower than that that is absorbed, the light released would have a longer wavelength than the ultraviolet light absorbed, making the light to fall under the visible light spectrum, allowing the human eye to see it (Harris, 2020). We decided to use blacklight and bleach as a blacklight is easy to simulate and bleach is easy to find. As such, we are going to present this Science concept through an interactive exhibit.

Section 3: Prototyping

Section 3.1: Overall Design

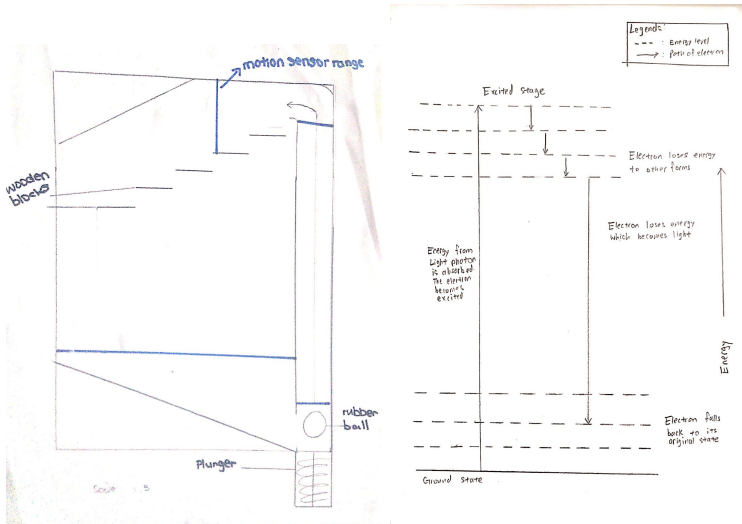

Fig 1. Preliminary Drawing of Science Exhibit(Left) Jablonski Energy Level Diagram(Right)

We will be presenting this Science concept through an interactive exhibit in the form of a pinball machine. A pinball machine is able to correctly represent the concept of fluorescence through the Jablonski energy level diagram, yet at the same time appeal to the audience because of its interactivity, making a pinball machine a logical choice.

When the plunger (light photon) hits the rubber ball (electron), the rubber ball moves up the pinball machine, representing the electron gaining energy. The rubber ball then vibrates as it moves down short wooden blocks, representing the electron vibrating and losing energy which is released as heat. The electron will then move down and complete a round, symbolising that the electron gives out energy as light energy of the visible spectrum.

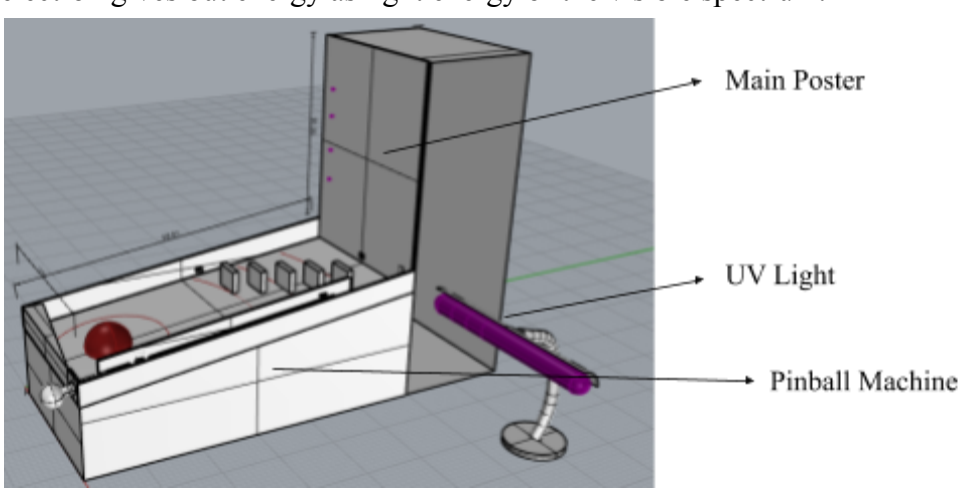

Fig 2. 3D Design of the Pinball Machine

As seen above, there will be a poster attached to the pinball machine itself. When the ball reaches a certain stage, a corresponding Light-Emitting-Diode(LED) would light up beside the poster on the machine. The LED is used to connect what is happening to the pinball machine and what actually happens in the fluorescence process. There will also be another poster displayed separately(not shown in Fig 2) to further explain the concept. At the end of each round, UV LEDs will light up, showcasing the effect of fluorescence. Arduino will be used to connect and coordinate all the LEDs together.

Section 3.2: Arduino

After learning how to program Arduino, infrared sensors were purchased to detect the movement of the ball at certain stages of the exhibit. When the first sensor is activated, the first LED (Light-emitting Diode) will light up. As more sensors are activated, more LEDs will light up. As the last sensor is activated, all the LEDs will turn off. Sound effects were also added and there will be UV LEDs to showcase the fluorescence effect.

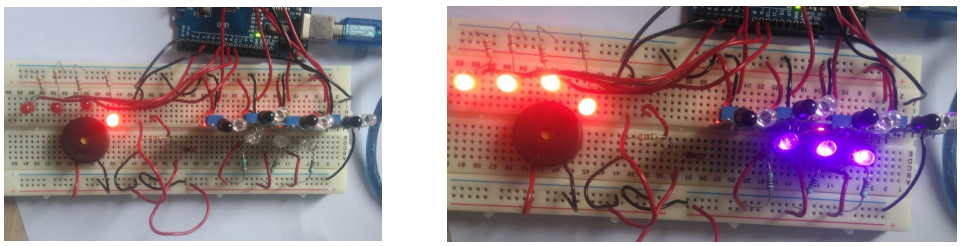

Fig 3. Activation of First Sensor(Left) Activation of the Final Sensor(Right)

Section 3.3: Prototype

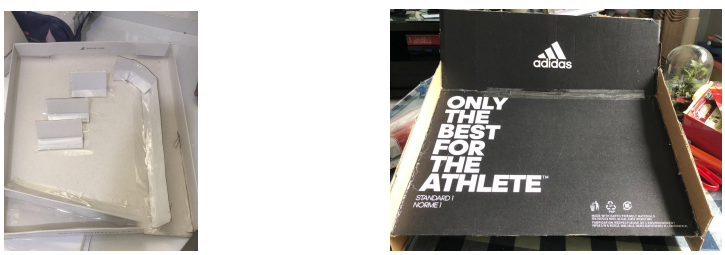

Fig 4. Interior Prototype(Left) Exterior Prototype(Right)

A prototype of the pinball machine itself was also built using cardboard. A few problems were discovered in the prototyping process. At the top-right edge of the prototype, the ball was stuck. In order to solve this, we decided to add a curved wall to facilitate the movement of the ball. When the ball was moving up, its path was not smooth. We will be adding a semi-circle tube so that the path of the ball would be smoother. The angle of 25 degrees was also too steep for the ball. Hence, after some research, we decided that the pinball machine would be angled at 7 degrees.

Section 3.4: 3D Model

The fundamentals of 3D Design was learnt through a MOOC(Massive Online Open Course). Improvements were made to the design through the Rhino editing software. Through the MOOC, the concept of primitives(spheres, cubes etc.) was learnt and the technique of extrusion was learnt. Boolean logic like unions and intersections were used to combine different parts of the pinball machine together. Different colours and layers were used to render the objects.

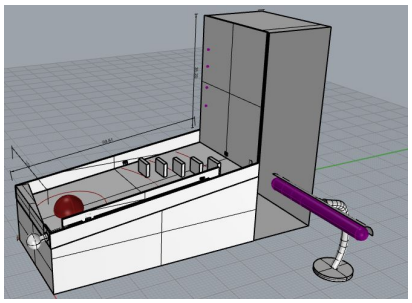

Fig 5. Overview of 3D Model

A semi-circular tube was added for a smoother path and the slope of the angle was changed to 7 degrees (Refer to Appendix Fig 2). A curved wall was added so that the ball would not get stuck (Refer to Appendix Fig 3). A plunger was added, which would symbolise a light photon hitting an electron (Refer to Appendix Fig 4).

Section 3.5: Building the Pinball Machine

Materials were obtained from the Science Research Centre. Firstly, the wood was cut to the desired size with a jigsaw. The wood was then sanded and filed and holes for the sensors were cut using the scroll saw and the drill press. The wood was also primed(Refer to Appendix 5) before painting. After that, the wood was painted with spray paint and primed again for protection. It was then drilled together with screws and hammered together with nails.

Fig 6. Pinball Machine (Before Painting)(Left) Primed wood with holes(Right)

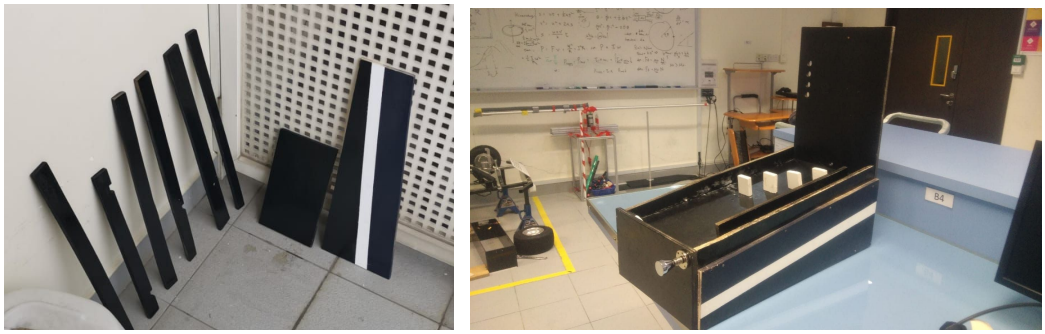

Fig 7. Painted and Primed Wood(Left) Pinball Machine after Drilling(Right)

Section 3.6: Poster

2 posters were created for the pinball machine. One poster is to complement the LEDs from the Arduino and the other one is used as an explanation board. After receiving comments, we decided to improve on our posters. From the first design, we realised that many of the terms we use in our explanation were too difficult to understand for our target audience and tried our best to improve on rewording the explanation to suit the audience's understanding of the concept. However, we then received comments on how the poster was too wordy and hence decided to reduce the amount of words in the poster and instead replace it with diagrams to explain the concept visually, which is more appealing. The most updated version of the posters are here.

Refer to Appendix Section 4.5 for previous versions of the posters.

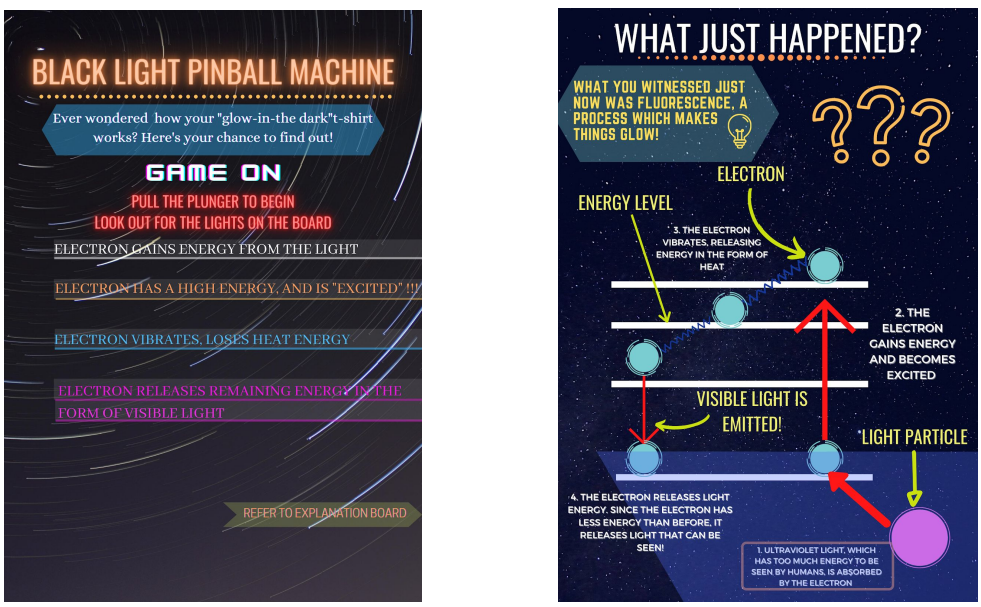

Fig 8. Version 3 of Main Poster(Left) Version 3 of Explanation Poster(Right)

Section 3.7: UV Light

Ultraviolet light LEDs, which has a shorter wavelength than visible light, were bought in order to showcase the actual fluorescence effect. In a trial run with the fluorescence material being bleach, the invisible ink glowed under visible light

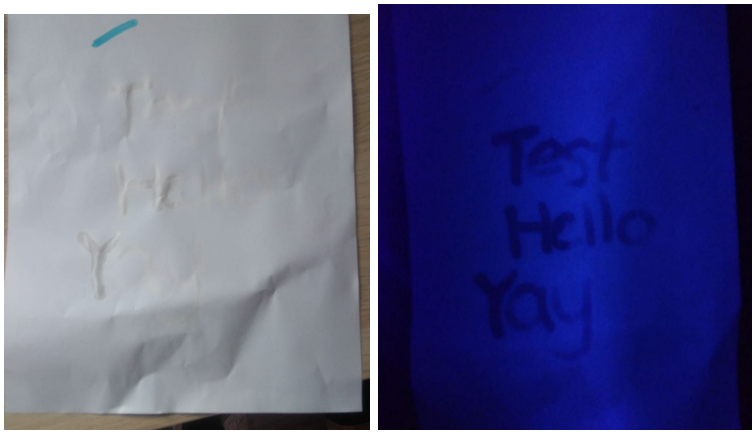

Fig 9. Bleach under Normal Light(Left) Bleach under Ultraviolet Light(Right)

Section 4: Future Work and Conclusion

Currently, we have finished our main body of the prototype. However, some work still has to be done. First, we would have to add the Arduino to the prototype. We were unable to do it before the final evaluation as it required calibration and will be very time consuming. Secondly, we will need to make amendments to the main body of the prototype.We have realized that the ball does not move smoothly through the interior, as such, we will be putting curved tracks to reduce chances of the ball going in an unintended direction.We will also put on a glass screen on top of the model to ensure the ball does not fly out of the pinball machine. Thirdly, we will need to print out the first poster and attach it onto our pinball machine along with the LEDs. Lastly, we will need to attach the blacklight to the prototype, we have not done it yet since the blacklight we have ordered did not arrive before the final evaluation.In conclusion, our prototype currently does not showcase the idea of fluorescence yet, however, after we add the finishing touches and finish the future work, the machine should be able to run smoothly and showcase the idea of fluorescence clearly. We hope that the students, after using the exhibit, will gain an insight and greater interest in Science itself.

Section 5: References

Bhend, E. (2019, October 9). *Why you can't see infrared or ultraviolet light.* Available: https://www.ceenta.com/news-blog/why-cant-i-see-infrared-or-ultraviolet-light. Retrieved August 18, 2020.

Durham University. (2008). *Relative Difficulty of Examinations in Different Subjects.* United Kingdom. Available: https://www.researchgate.net/publication/232607636_Relative_Difficulty_of_Examinations_in_Different_Subjects Retrieved May 21, 2020.

Harris, T. (2020, January 27). *How Black Lights Work*. HowStuffWorks. Available: https://science.howstuffworks.com/innovation/everyday-innovations/black-light.htm. Retrieved June 24, 2020

Hefferon, M., & Funk, C. (2018, January 17). *Students don't pursue STEM because it's too hard, say 52% of Americans*. Available: https://www.pewresearch.org/fact-tank/2018/01/17/half-of-americans-think-young-people-dont-pursue-stem-because-it-is-too-hard/. Retrieved May 21, 2020.

Helmenstine, A. M. (2019, May 5). *What Is a Black Light?* Available: https://www.thoughtco.com/what-is-a-black-light-60762. Retrieved June 24, 2020.

Ho, S., Chan, J., Yang, X., Liao, Y., Turner, D., & Tan, R. (2015). *A Survey of Public Views and Attitudes towards Science and Technology Issues in Singapore.* Available: https://www.asianscientist.com/wp-content/uploads/2015/11/A-survey-of-public-views-and-attitudes-towards-science-and-technology-issues-in-Singapore.pdf. Retrieved August 07, 2020.

The Chemical Industry Education Centre, University of York. (2008). *Learning to Love Science: Harnessing children's scientific imagination*. United Kingdom. Available: https://nzapse.nzase.org.nz/app/uploads/2017/09/Learning-to-Love-Science.pdf Retrieved May 20, 2020.

University of California Museum of Paleontology. (n.d.) *Understanding Science*. Available: https://undsci.berkeley.edu/index.php. Retrieved August 13, 2020.

Wikipedia contributors. (2020). *Fluorescence*. Available: https://en.wikipedia.org/wiki/Fluorescence. Retrieved July 17, 2020.

Section 6: Acknowledgements

We would like to thank the following people who have helped us in this project:
Dr Kelvin Tan, for his valuable mentorship and guidance, and
Mdm Chua and Mdm Foo, for their help and guidance in the SRC.

Appendix

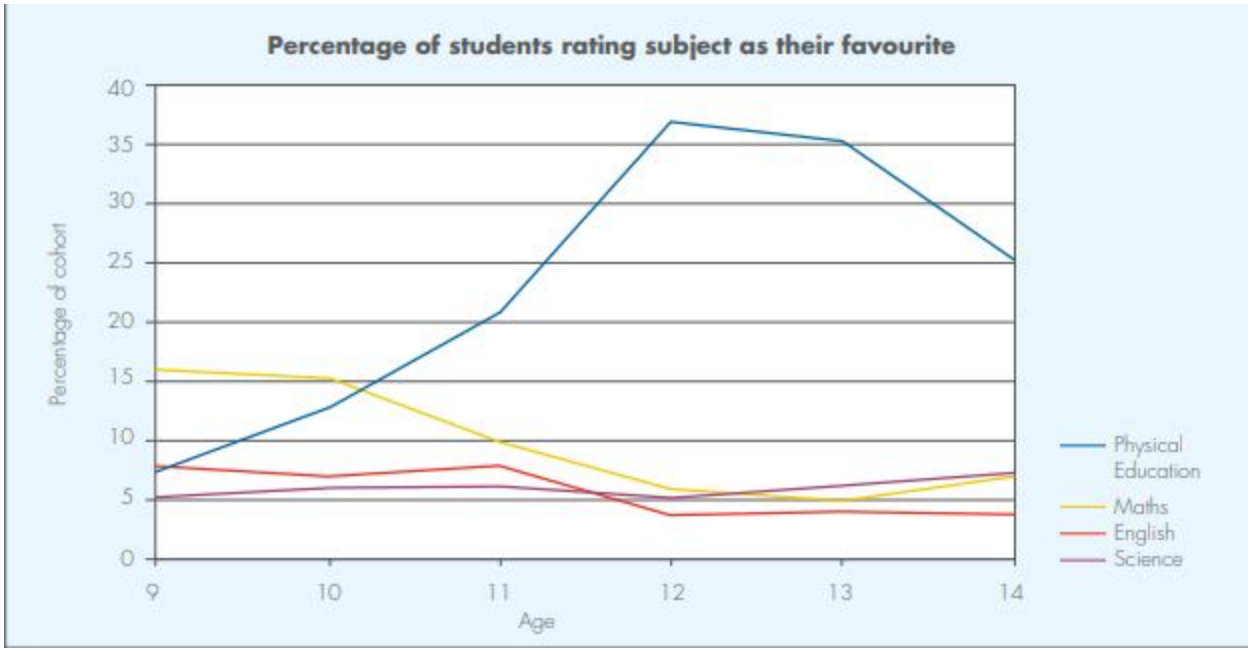

Fig 1. Students' Favourite Subjects(Porter & Parvin, 2008)

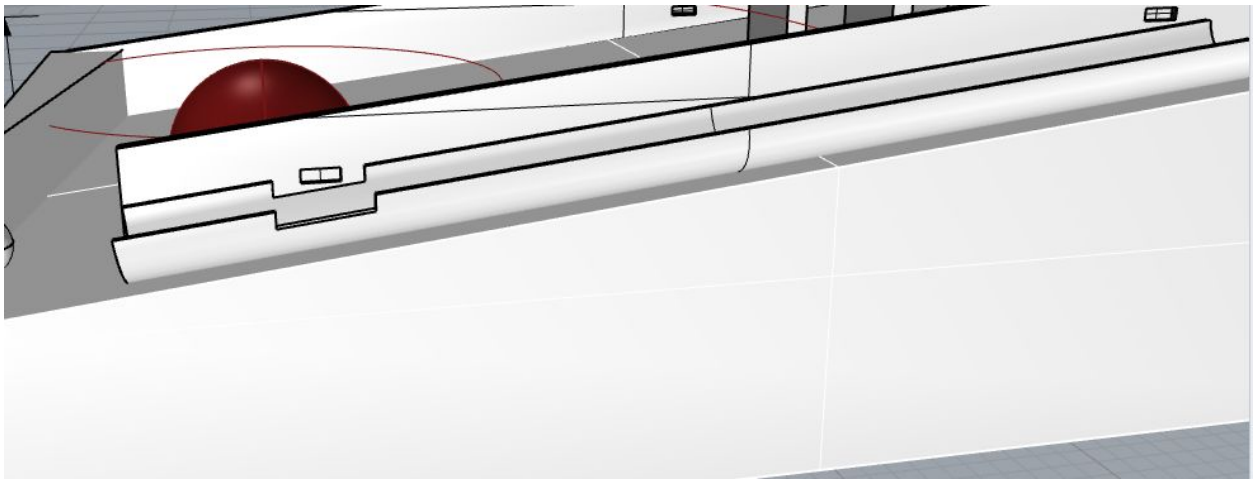

Fig 2. 7 Degree Slope and Semi-Circle Path(Part of side is removed for greater clarity)

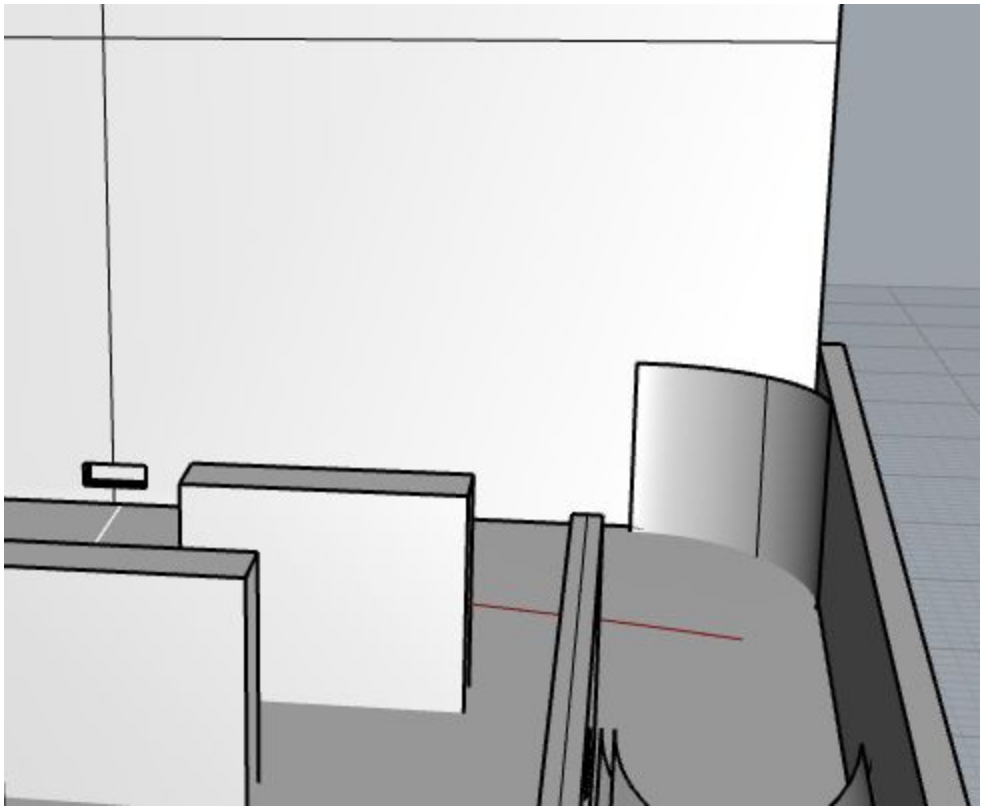

Fig 3. Curved Wall

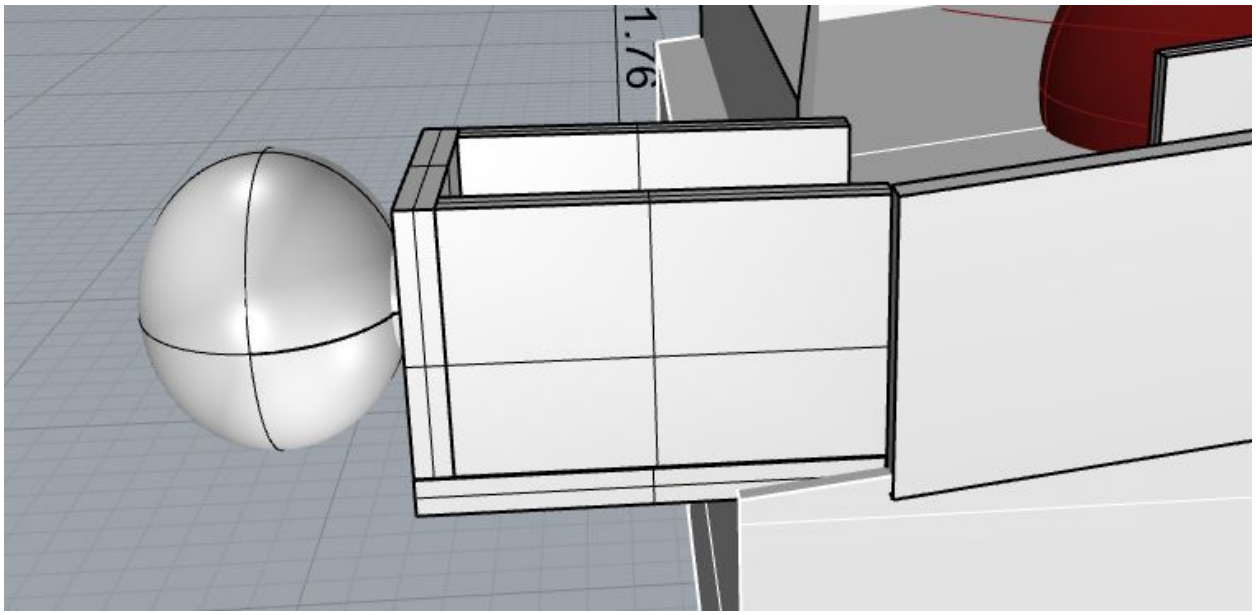

Fig 4. Plunger

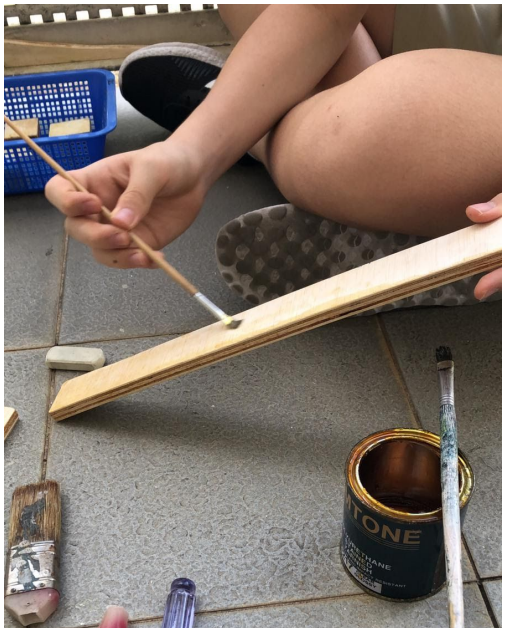

Fig 5. Priming the Wood

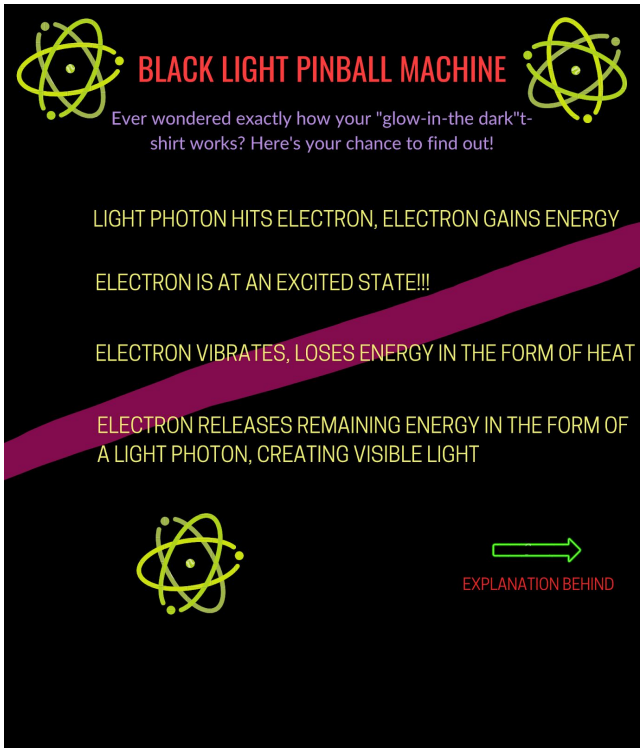

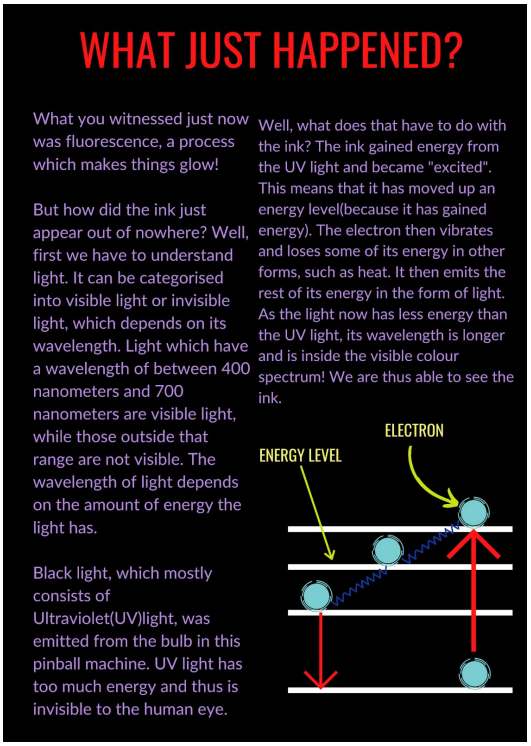

Fig 6. Version 1 of Posters

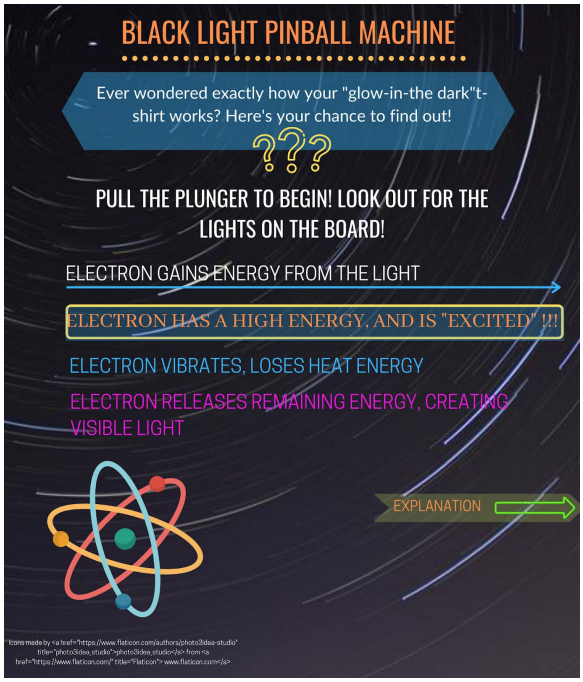

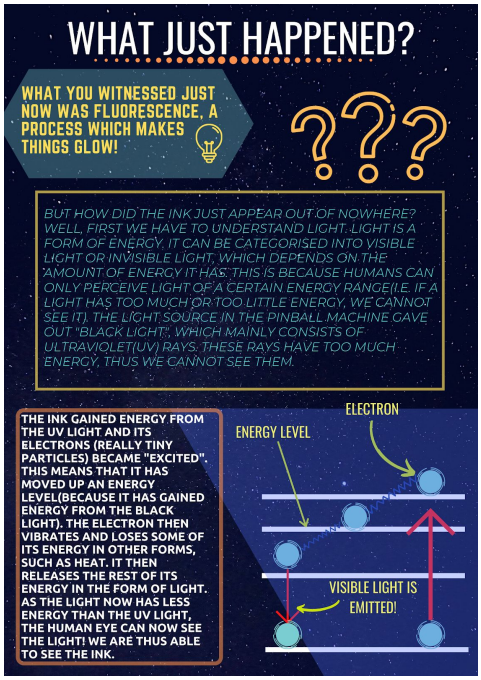

Fig 7. Version 2 of Posters