Hwa Chong Institution
Project Work
Category 3
Inventions Log Book
(Revised for 2020)

Title of Project: The Venturi effect
Group Name: The Venturi effect
Group Members: 1) Gary Vintario 1i1 2) Gan Wei Pin 3A2 3) Toh Jin Hao 1i1 4) Timothy Oh Hao An 1i1

1. Problem Finding

1 A Document a list of problems you have identified. Your documentation should show clearly how your group came up with the problems.

1. Due to global warming, the temperature of the environment has increased. This results in warm weather, making people feel hot.

2. Soft toys at home that are not used anymore due to children growing out of them are bulking up the house, resulting in excessive throwing of soft toys.

3. We observed that too many containers are not reusable while taking away food as containers are always thrown away without second thought.

4. Excessive throwing of sweet/ food wrappers (The White Rabbit Sweet and wondered about the edible wrapper)

1 B You should have selected a problem based on some considerations. Identify and justify these considerations.

We have selected Problem 1 which is regarding warm weather. We feel that Problem 1 is the most practical as it is something that much effort has been done to stop or slow down the problem. Unfortunately, the solution only results in more serious problems such as global warming. We feel that this should not be the case. Thus, we decided to come up with a solution which would help cool people down while keeping electricity usage and wastage of resources at its minimum.

1 C List some problems your group would like to solve. List also the considerations for selection of problems in the evaluation grid below. Score the considerations, against the problems, with points 1 (least significant) to 4 (most significant). Sum up the total points for each problem. Identify that problem you would like to solve.

Problem Evaluation Grid

Considerations for Selection	Problems			
	#1 (Warm Weather)	#2 (Excessive throwing of soft toy)	#3 (Non-reusable containers)	#4 (Sweet/ Food wrappers)
Creativity	4	3	3	2
Usefulness	4	3	4	2
Practicality	4	3	3	3
Total Score	12	9	11	7

2. Define the Problem

2 A Extent of problem (Research and discuss the problem and write down the problem statement)

The problem that we have selected is Problem 1: Warm weather. We feel that Problem 1 is the most practical as Singapore is known for its warm and humid weather, to the point that many rate it as unbearable.

In our survey results of 50 respondents, 64% of the respondents feel that Singapore's tropical weather is uncomfortable.

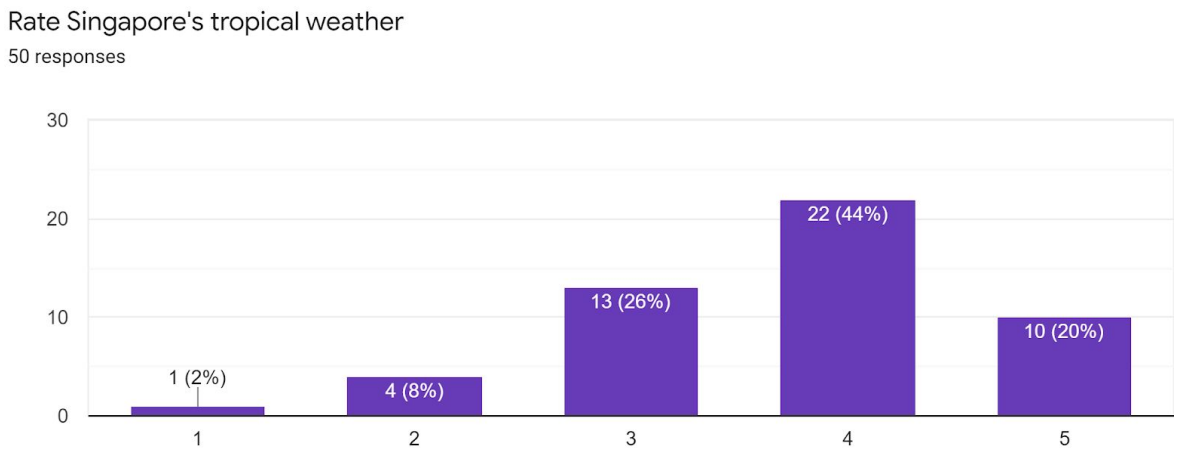

As can be seen in the above graph, 1 stands for very comfortable weather and 5 stands for very unbearable weather.

At the same time, global warming is also on the rise, with a large consumption of electricity being one of the most significant contributors. Air-conditioners and fans contribute a significant usage of electricity at home. This is also shown in our survey results where this time 94% of the 50 respondents agreed with this statement.

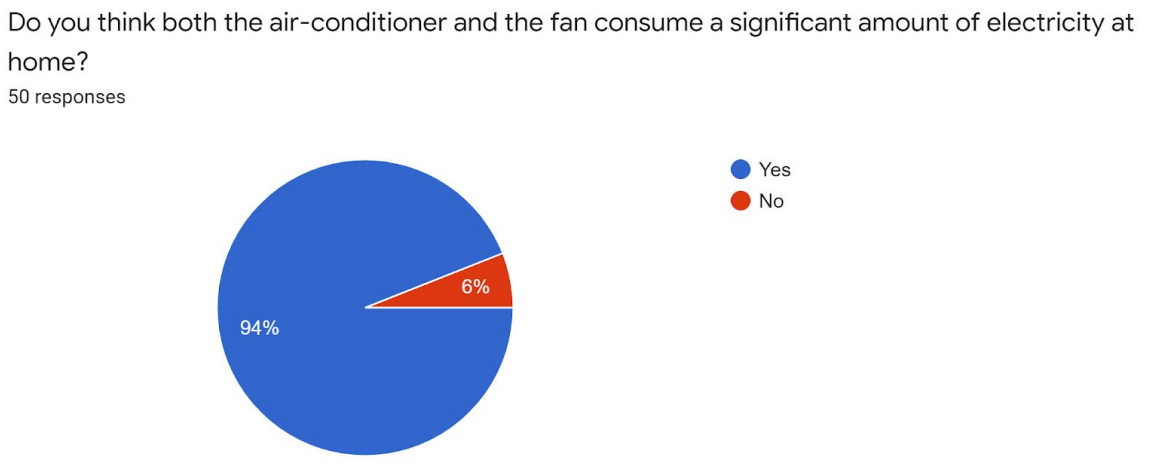

Hence, our eco-friendly cooler will be very useful and suited for tropical weather while reducing the consumption of electricity drastically.

2 B Compare and contrast the existing or similar solutions.

Air conditioning is an example of existing solutions. It helps to cool down the surroundings and is favoured by many people. However, using air conditioning is not sustainable as it requires large amounts of electricity and water. Thus, this contributes to global warming and is not sustainable in the long run. Fans are also used. However, they also require electricity to work but are less than that of air-conditioners. In addition, there are eco coolers that are made out of recycled materials in the rural areas of India, where temperatures surge above 35 degrees Celsius at certain times of the day.

3. Your BIG IDEA

3 A Describe your proposed invention.

Our proposed invention is to use the concept of the Venturi effect and Bernoulli's principle to make a prototype which will allow the air in a room to cool down as warm air from the surrounding passes through the prototype. This prototype requires neither electricity nor water. It only requires wind that has a higher temperature than room temperature to pass through it.

3 B Explain the purpose of your proposed invention and the potential benefits to users.

The purpose of our invention is to enable people to have an alternative way of reducing the temperature of the environment in a more sustainable and efficient way. Instead of paying for hefty

electricity bills that could have been spent on other more crucial daily necessities like food, our invention would potentially be able to completely waive the costs of electricity spent on cooling one's house.

3 C In what ways would your proposed invention be different and/or better than existing solutions, if any?

Our proposed invention does not require electricity or water as it is purely dependent on the pressure differential and expansion of air molecules to cool down the air. This would help the user to reduce the amount of water and electricity they use, helping them to save money and playing a part in reducing the effects of global warming. In addition, our solution is very sustainable and would only need to be cleaned once or twice a month (which varies based on the environment). This is beneficial as it does not require money to be operated and could work as well as a normal fan. The materials used will also be more environmental, for instance the apparatus which helps to converge the air is to be made using bioplastics, allowing the prototype to decompose and break down more easily if unused or thrown away.

3 D What are some problems you expect in the course of your proposed invention?

- The difference in temperature of the surrounding air and the air in a room might not be significant enough.
- There might not be buyers of our product as air conditioning will be preferred and the temperature is easily adjustable according to one's preferences.
- The structural integrity of the prototype might be compromised as a result of the usage of bioplastics during the 3D printing of the final prototype
- The instrument used to measure the temperature might not be accurate in detecting the temperature in air

3 E What and when are the major milestones (project timeline) in your invention?

1. The making and amending of our prototype and the experiments to test it.
2. When the prototype first succeeded in cooling down a simulated room environment (an airtight box)
3. Insufficient materials to make better prototypes and conduct future experiments
4. The final prototype which is supposed to be 3D printed is accomplished using funnels of different sizes and a piece of cardboard

4. Proposed Construction and Modelling Process

4 A Explain how and why the materials were chosen for the prototype/ product of your invention

1. Prototype 1
    a. Egg Trays
        i. Easily found
        ii. Can be recycled, saving the environment
    b. Tape
        i. To secure the egg trays together
2. Prototype 2
    a. Egg Trays
    b. Plastic Bottles
        i. Has the suitable shape for Venturi effect to take place
        ii. Easily found
        iii. Reusing plastic bottles conserves the resources and environment
    c. Glue
        i. Secure the plastic bottles to the egg trays
    d. Tape
3. Prototype 3
    a. Cardboard
    b. Egg Trays
    c. Plastic Bottles
    d. Yakult Bottles
        i. Has the suitable shape for Venturi effect to take place
        ii. An alternative to resolving the lack of plastic bottles due to implementation of Circuit Breaker measures
    e. Glue
    f. Tape
4. Prototype 4
    a. Filter funnels → Funnels come in 3 different sizes
        i. Has the suitable shape for Venturi effect to take place
    b. Cardboard
    c. Superglue
    d. Nylon (Polyamide) → For 3D printing
        i. Waterproof
        ii. Strong
5. Ideal Final Prototype
    a. Bioplastics (Bio-PA)
        i. Strong
        ii. Waterproof
        iii. Resistant to high temperatures
        iv. Biodegradable in environment

4 B Explore these considerations that may guide the construction of your prototype/ product.

- Could cooler air be escaping out of the prototype and affecting the change in temperature?
- What must the temperature of the surrounding air be for the prototype to be effective?
- Does the invention prevent one from looking out of the window and check one's surroundings?

- Since bioplastics are made up of fibres, is the final prototype effective in directing the air through the intended path?
- What kind of material must be used such that the prototype doesn't become wet during rainy days?

4 C Propose how the prototype/ product will be constructed or developed. You may use drawings and photographs.

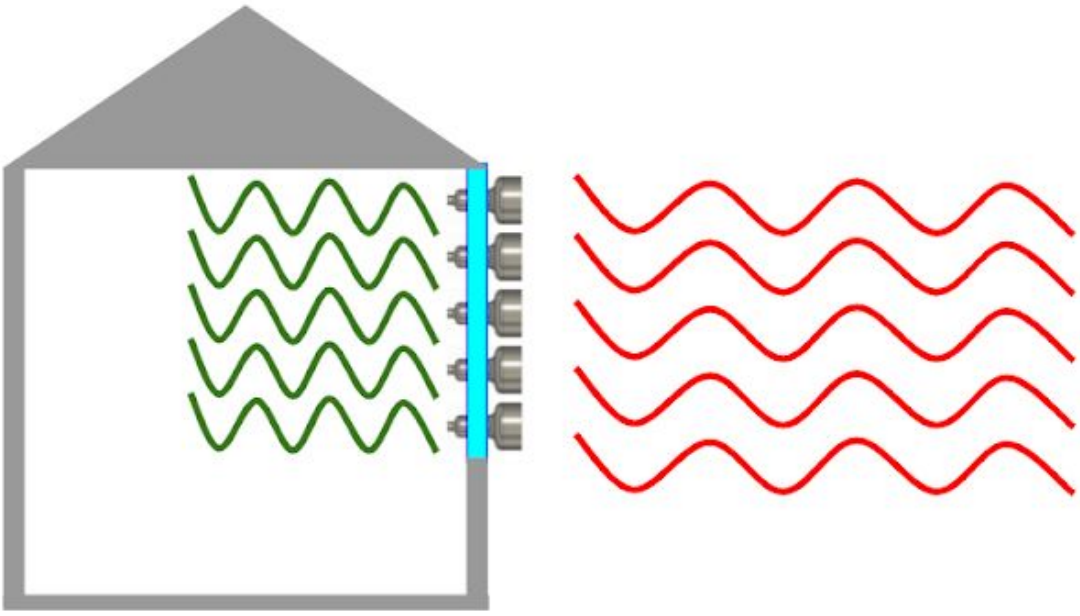

Our overall idea is to attach this prototype to any window that can be found in one's house. As long as the surrounding air (denoted by the red lines in the diagram) is warmer than the air within the house or a room (denoted by the green lines), the prototype will be effective in cooling down an enclosed area.

Prototype 1:

The initial temperature of the test environment (classroom) is 26 degree Celsius, whereas the final temperature still remained at 26 degree Celsius. The test was performed in a classroom with closed windows and doors, while all the fans were turned off, with the exception of the stand fan used to blow through the first prototype.

Prototype 2:

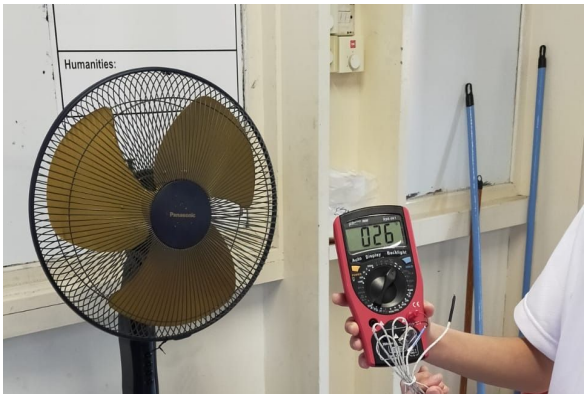

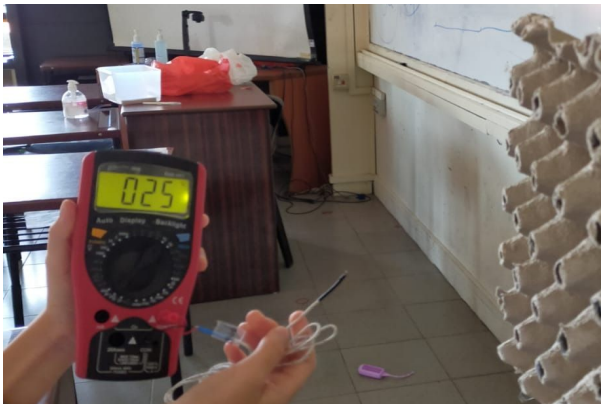

The initial temperature was 26 degree Celsius and the final temperature after the experiment was 25 degree Celsius. The test was performed in the same environment as the previous test. This indicates a success since there was a drop in temperature by 1 degree Celsius. With this test being a success, we are able to move on to the next prototype.

Prototype 3:

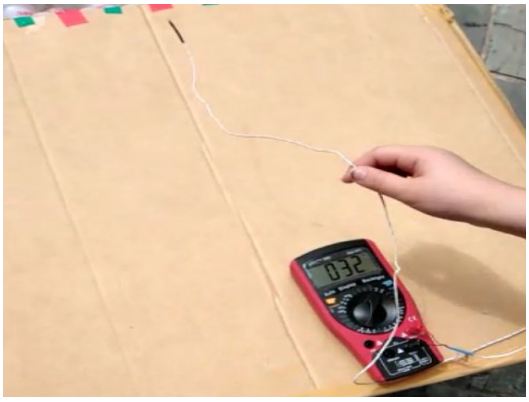

The 3rd test was performed in a different environment from the first 2 experiments. A 60cm by 60cm by 60cm box was used this time round to simulate the environment of a room, which we ensured was airtight by using tape to cover all holes that are spotted. We then attached the prototype to the uncovered end of the box and covered unnecessary holes which would affect the results of our experiment. Finally, we placed the box in an open area where it was windy on a sunny day. This allows us to derive our initial temperature of 32 degree Celsius and the final temperature after the experiment of 29 degree Celsius. A 3 degree reduction temperature was achieved and to ensure the results were accurate, we left the set up in the open for approximately 1 hour, which did not increase the temperature of the box.

Prototype 4:

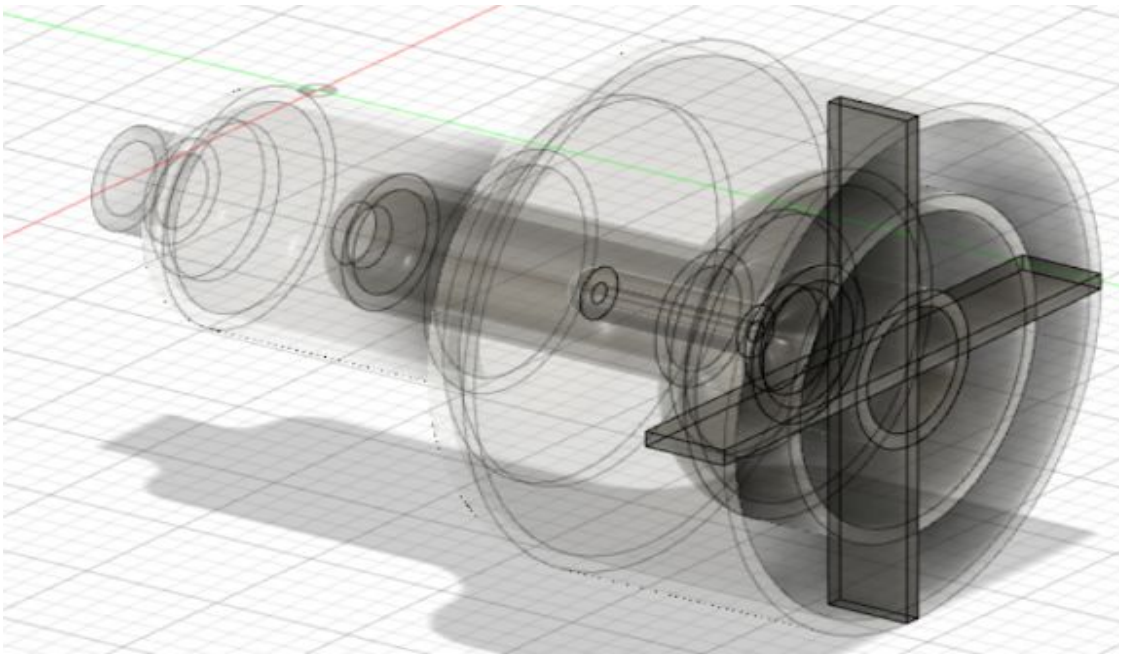

Our final prototype comes in 4 different layers for every apparatus due to the 3D printers' constraint, which are to be glued together afterwards.

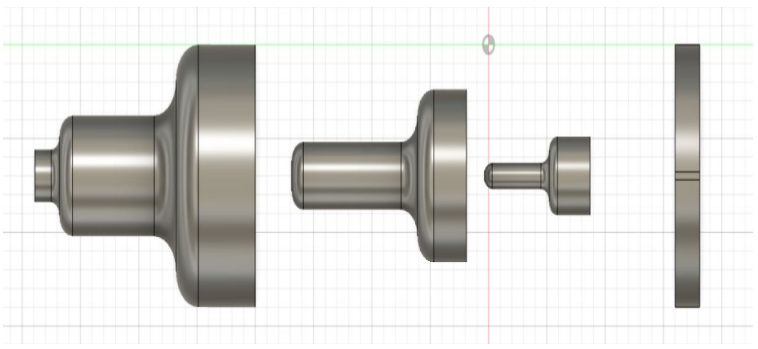

They contain the base and 3 funnels of different sizes. Ideally, we would have 5 x 5 or 25 pieces of these apparatus being attached to a bioplastic board. The dimensions are as follows:

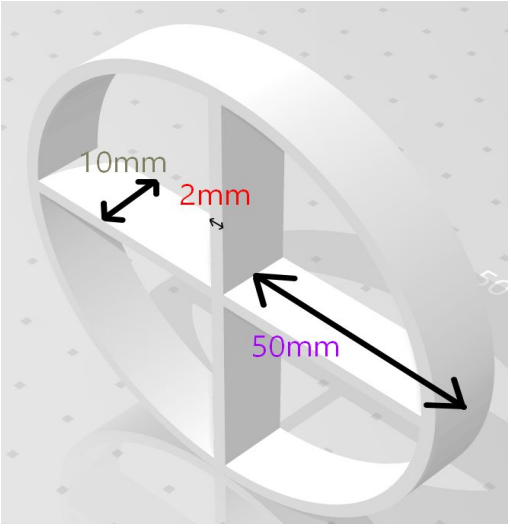

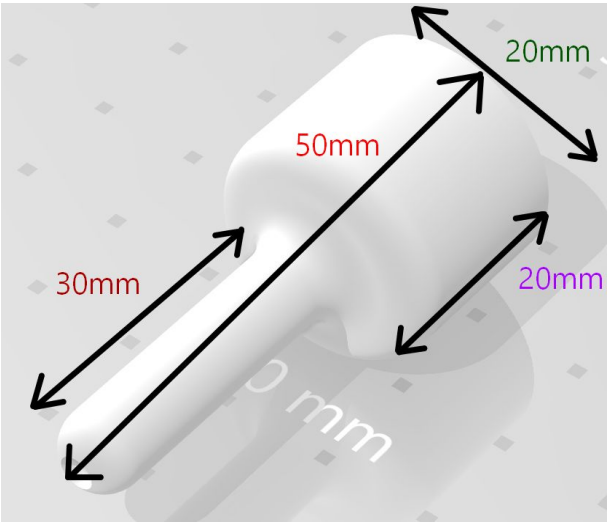

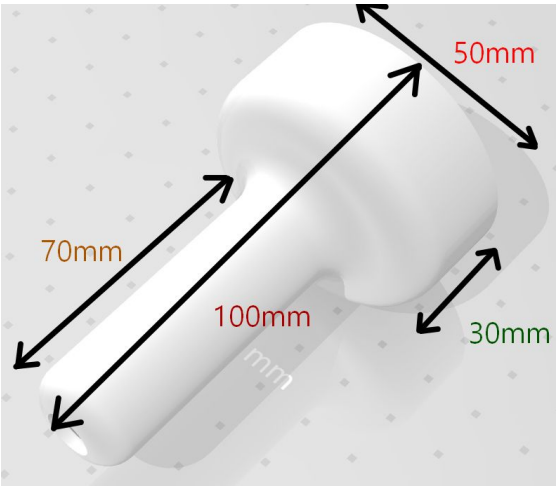

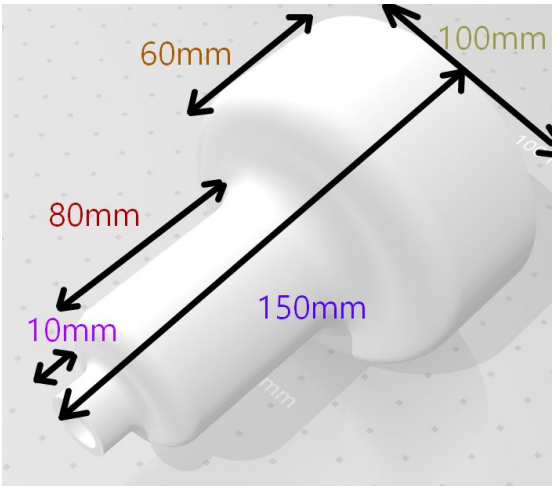

Unfortunately, due to a lack of time and the limited opening hours of the SRC, we are only able to print out 1 apparatus and make a replica using filter funnels of 3 sizes and attach everything together with superglue. Instead of using 5 x 5 apparatus, we cut down the number to 4 x 4 or 16 apparatus.

Apparatus:

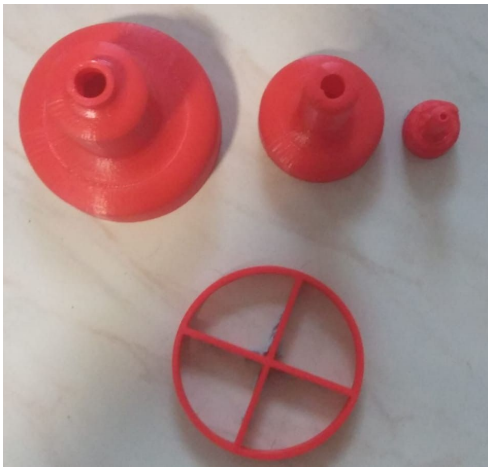

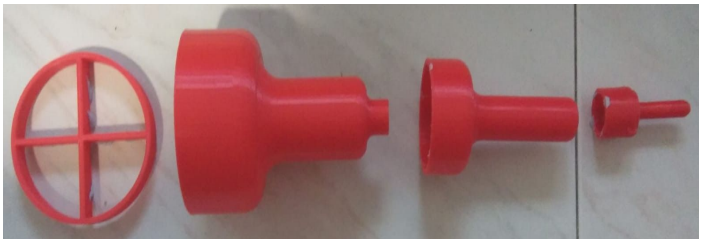

Each apparatus costs $8, and when multiplied by 25 it would give $200 per prototype. Even though this figure might seem very expensive, it still far outweighs the cost spent on monthly electricity bills from the usage of air-conditioners and fans, while the $200 is only a one time charge and the price could reduce if there is mass production of the product in the future.

Replica:

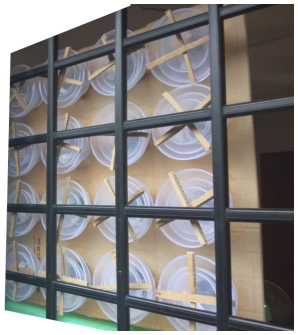

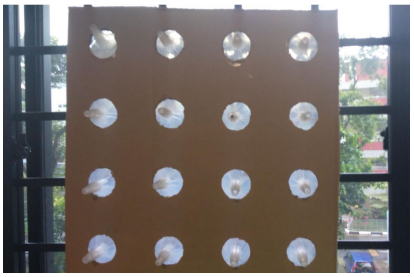

Each replica apparatus is made up of 3 filter funnels, which costs $0.50, $0.70 and $1 respectively. This is multiplied by 16 apparatus which would cost a total of $35.20 per prototype.

5. References

Climate Change / Global Warming

- Tan, A. (2020). *2019 was Singapore's joint hottest year on record; and 2010-2019, the hottest decade ever.* The Straits Times. Retrieved from https://www.straitstimes.com/singapore/environment/2019-was-one-of-the-hottest-years-on-record-in-singapore-and-2010-2019-the
- Meteorological Service Singapore. (2020). *Historical extremes of Singapore's climate (Humidity).* Retrieved from http://www.weather.gov.sg/climate-historical-extremes-humidity/
- National Environmental Agency. (2020). *2019 Is Singapore's Joint Warmest Year On Record.* Retrieved from https://www.nea.gov.sg/media/news/news/index/2019-is-singapore-s-joint-warmest-year-on-record
- Weather Spark. (2020). *Average Weather In Singapore.* Retrieved from https://weatherspark.com/y/114655/Average-Weather-in-Singapore-Year-Round

Electrical Consumption

- Tan, S. H. (2018). *Households consuming 17% more electricity than a decade ago.* Channel News Asia. Retrieved from https://www.channelnewsasia.com/news/singapore/households-consuming-17-more-electricity-than-a-decade-ago-10205532
- Khoo, B. K. (2019). *Feeling warm at home? Turning up your air-con at full blast might not be the best solution.* Channel News Asia. Retrieved from

https://cnalifestyle.channelnewsasia.com/trending/air-conditioner-installation-hdb-flat-11672938
- KDK. (2019). *KDK Fan K1570 (150cm/60")*. Retrieved from https://www.kdk.com.my/product/k15v0/
- National Environmental Agency. (2019). *The Energy Label.* Retrieved from https://www.nea.gov.sg/our-services/climate-change-energy-efficiency/energy-efficiency/household-sector/the-energy-label
- KDK. (2019). *KDK Fan M60SG.* Retrieved from https://www.kdk.sg/m60sg.html
- drumitloud.com. (2019). *The Best Aircon Brands in Singapore | 2020 Buying Guide.* Retrieved from https://www.drumitloud.com/best-aircon-review-singapore/

Venturi Effect Explained

- guy. (2015). *Bernoulli Effects.* sciphile.org. Retrieved from http://sciphile.org/curricula/bernoulli-effects
- guy. (2016). *Bernoulli's Principle and the Venturi Tube.* sciphile.org. Retrieved from http://sciphile.org/lessons/bernoullis-principle-and-venturi-tube
- Nahela, N. (2017). *Zero electricity air-con made of plastic bottles.* The Daily Star. Retrieved from https://www.straitstimes.com/world/zero-electricity-air-con-made-of-plastic-bottles
- Grey Dhaka. (2019). *Eco cooler: Zero electricity Air Cooler.* YouTube. Retrieved from https://youtu.be/op_TO0wP4kI
- Moebs, W., Ling, S. J., Sanny, J. (2019) University Physics Volume 1 (14 Chapter Review). OpenStax, Pressbooks. Retrieved from https://opentextbc.ca/universityphysicsv1openstax/chapter/14-chapter-review/
- The Gate Matrix. (2017). *Fluid Mechanics.* Retrieved from https://www.thegatematrix.com/today-dcb.php?date=MjAxNy0xMi0yOQ==
- Wikipedia. (2020). Venturi effect. Retrieved from https://en.wikipedia.org/wiki/Venturi_effect
- United Nations. (2019). *Global Warming | 12 Years Left To Stop It.* primalsurvivalpodcast. Retrieved from https://primalsurvivalpodcast.com/2019/04/30/global-warming-and-climate-change/

Similar Inventions

- Formula 1 Dictionary. (2011). *Diffuser.* Retrieved from http://www.formula1-dictionary.net/diffuser.html
- Shreejit, C. (2015). *Racecar Diffuser Technology on road cars.* torque.com.sg. Retrieved from https://www.torque.com.sg/features/racecar-diffuser-technology-on-road-cars/
- buildyourownracecar.com. *Car Aerodynamics Basics, How-To Design Tips cont… .* Retrieved from https://www.buildyourownracecar.com/race-car-aerodynamics-basics-and-design/4/

Material selection:

- Pye, A. (2017). *Europe clarifies its position on bioplastics.* PROSPECTOR ® . Retrieved from https://knowledge.ulprospector.com/6216/new-developments-bioplastics/
- Barrett, A. (2018). *Top 5 Biobased Materials Selected by the UN.* Bioplastics NEWS. Retrieved from https://bioplasticsnews.com/2018/06/04/top-5-biobased-materials-selected-by-the-un/